NUURA

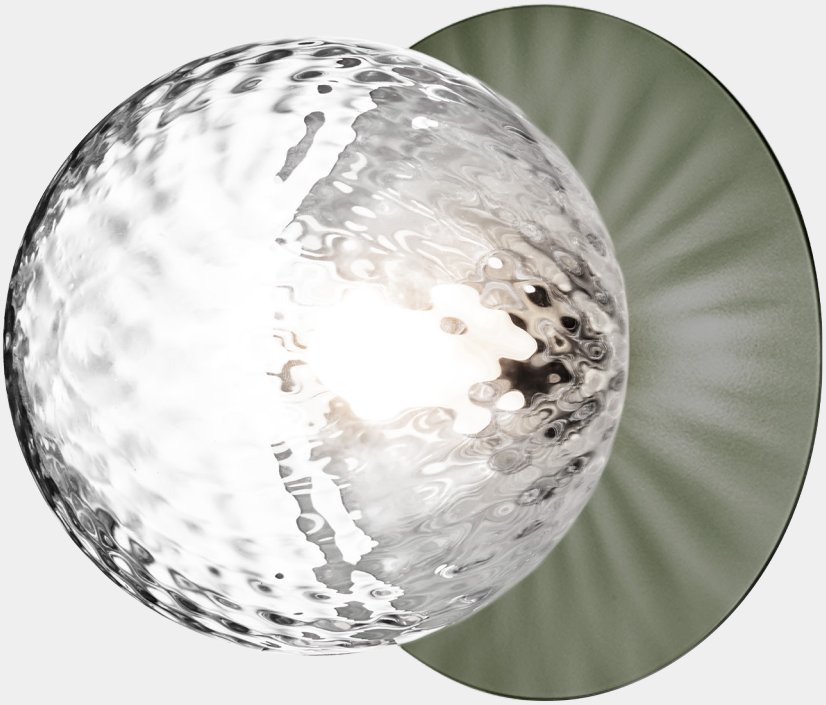

LIILA 1 MEDIUM
Hopeful green / optic clear

Design: Sofie Refer, 2018

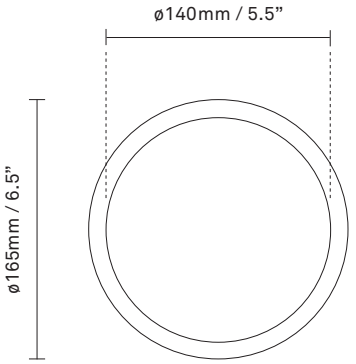

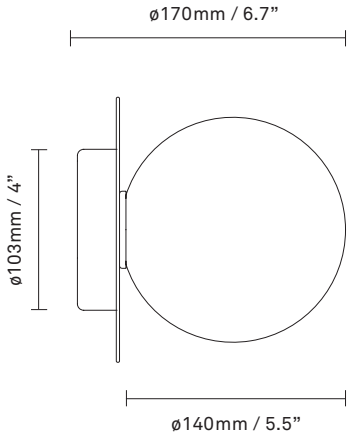

Liila 1 Medium works well as a single lamp or grouped in a decorative formation. Liila 1 Medium also suits smaller rooms, the bathroom and the entrance hall.

Explore the rest of the Liila collection on our website, here

---

Product no.: EU - 2046065

Type: Wall / ceiling light - indoor

Colour: Glass: optic clear / Metal: hopeful green

Materials: Powder-coated metal, mouth-blown glass

Dimensions: 165mm / 6,5in x 170mm / 6,7in
Ceilling plate: ø103mm / 4in
Glass: ø140 / 5.5in

Weight: Armature + glass: 1000g

Packaging: Dimensions: L: 338mm / 13,3in x W: 194mm/ 7,6in x H: 175mm / 6,9in
Weight: 480g
Total weight incl. product: 1480g
Number of parcels: 1
Material: Brown cardboard

Certifications: CE, IP20, Class II

For information about IP ratings, click here

Cleaning: Use a soft dry cloth to clean the product.
Do not use household cleaners.

Light source: Socket: G9
Max wattage: 7W LED
Voltage (V): 220-240V / 120V

See recommended light source here

Light sources not included

Dimmable if installed with appropriate dimmable LED light source(s) suitable for your dimmer circuit.
Light source can be added to delivery on request or via our webshop at nuura.com.

Works with appropriate lighting control module. Module can be added to delivery on request.
Find our recommendations here